AVR Programmer

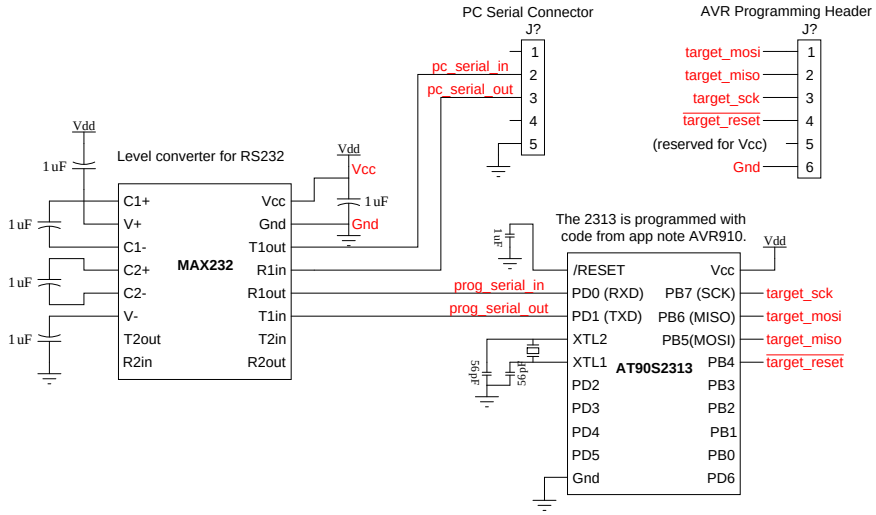

Application Circuit

The programmer is only needed at first, to program the 163's fuse bits and the boot loader. Afterward, the application code can be changed using just the serial connection, talking to the boot loader.

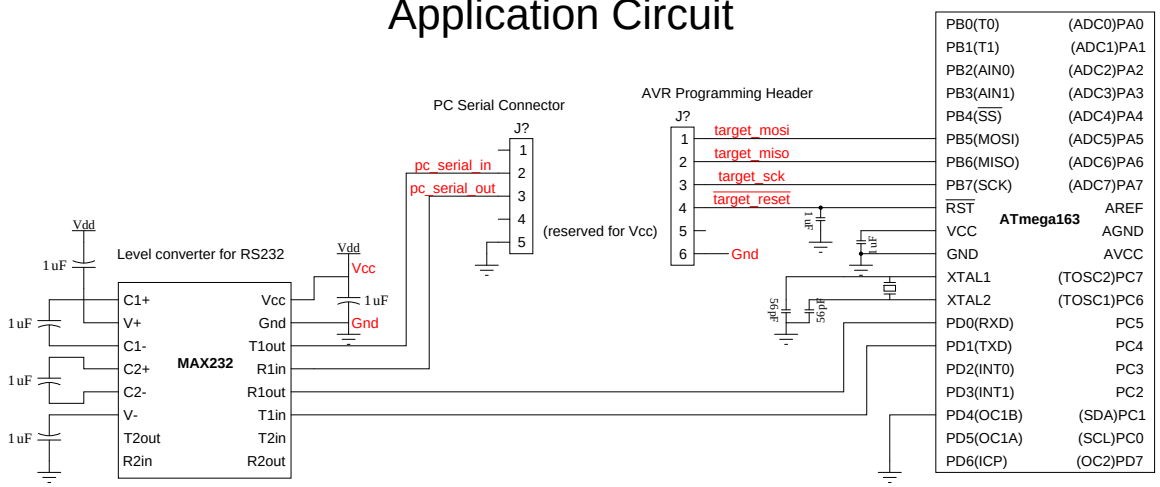

Pull down PD4 to enter boot loader at power-up. This can be changed in the boot loader source code.